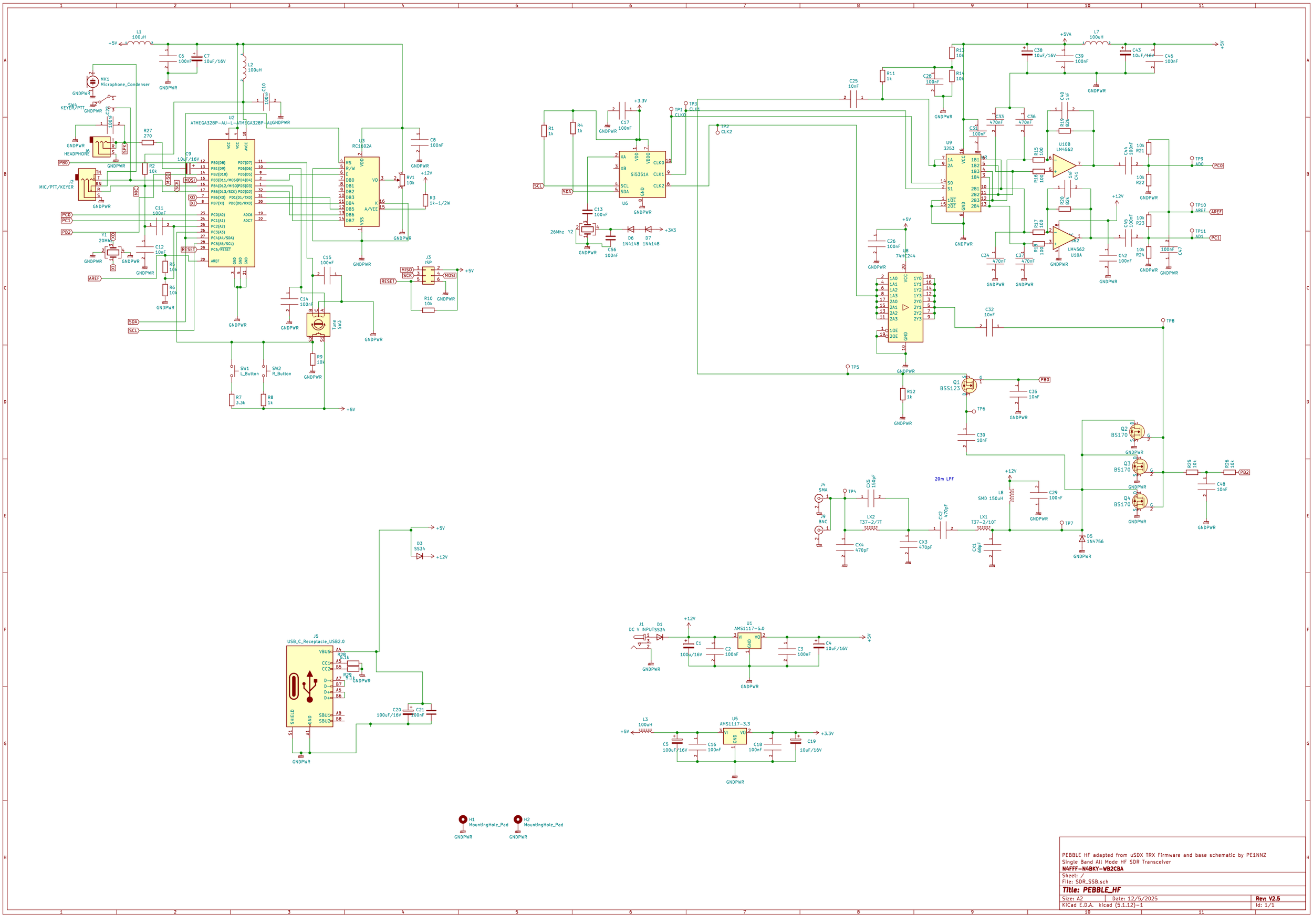

PEBBLE HF adapted from uSDX TRX Firmware and base schematic by PE1NNZ
Single Band All Mode HF SDR Transceiver
N4FFF-N4BKY-WB2CBA

Sheet: /
File: SDR_SSB.sch

Title: PEBBLE_HF

Size: A2	Date: 12/5/2025	**Rev: V2.5**
KiCad E.D.A. kicad (5.1.12)-1		Id: 1/1